BAXI

LUNA HT

SPARE PARTS CATALOGUE

- November 2008 -

HOW TO READ THE SPARE PARTS CATALOGUE

In the spare part catalogue, after the exploded diagrams, there are the components lists of the boilers; this is the meaning of the different columns:

Pos.	Identification number of the component in the exploded diagram of the boiler.
Description	Short description of the component.
Code	BAXI S.p.A. code of the component.
Tab. XX	XX is the exploded diagram number of the boiler taken into consideration.
From serial number	Date (year and week) identifying the beginning of production of a component (taken from the serial number of the boiler). e.g. B005: year 2000 (B identifies the decade 2000-2009; 0 identifies the year) – 5th week. If the box is empty, the component is in use from the beginning of production of the boiler.
To serial number	Date (year and week) identifying the end of production of a component (taken from the serial number of the boiler). e.g. B012: year 2000 (B identifies the decade 2000-2009; 0 identifies the year) – 12th week. If the box is empty, the component is still in use.
Interchangeable	It identifies the interchangeability between the new component and the old one. YES: components are interchangeable. NO: components are not interchangeable.

BOILERS CONNECTION BOARD - EXPLODED VIEW
TABELLA COLLEGAMENTO CODICE CALDAIA - ESPLOSO
TABLERO UNIÓN CALDERA - EXPLOSIONADO
TABLEAU CONNECTION CODEX CHAUDIERE - VUE ECLATEE

BOILER CODE CODICE CALDAIA CODIGO CALDERA CODE CHAUDIÈRE	BOILER DESCRIPTION DESCRIZIONE CALDAIA DESCRIPCION CALDERA DESCRIPTION CHAUDIÈRE	EXPLODED REF. RIF. ESPLOSO REF. EXPLOSIONADO RÉF. EXPLOSÉE
HSB435123001/2/3	LUNA HT 1_120	Tab 114
HSB435243001/2/3	LUNA HT 1_240	Tab 114
HSB435283001/2/3	LUNA HT 1_280	Tab 113
HSB436283001/2/3	LUNA HT 280	Tab 112
HSB436333001/2/3	LUNA HT 330	Tab 112
HSB437333000	NUVOLA HT	Tab 115
HSB437333001/2/3	NUVOLA HT	Tab 116

LUNA HT

Pos	Code	Description code	HSB43512300 1/2/3 1.120	HSB43524300 1/2/3 1.240	HSB43528300 1/2/3 1.280	HSB43628300 1/2/3 280	HSB43633300 1/2/3 330	HSB43733300 NUVOLA HT 330	HSB43733300 1/2/3 NUVOLA HT 330		To serial number	From serial number	Interchangeable:
1	5106510	REAR SUPPORT						●	●				
2	5113450	PANEL ASSEMBLY - LEFT	●	●	●	●	●				B640		
2	5116220	LEFT PANEL HT	●	●	●	●	●					B641	
2	5663160	LEFT PANEL ASSEMBLY						●	●				
3	5113440	PANEL ASSEMBLY - RIGHT	●	●	●	●	●				B640		
3	5116210	RIGHT PANEL HT	●	●	●	●	●					B641	
3	5663140	RIGHT PANEL ASSEMBLY FF						●	●				
4	5112120	FRONTAL PANEL ASSEMBLY FI	●	●	●	●	●				B640		
4	5116680	FRONTAL PANEL H672 TX5I	●	●	●	●	●					B641	
4	5666890	FRONTAL PANEL NUVOLA HT ASS.						●	●				
5	5114030	UPPER BAR NUVOLA HT330						●	●				
6	5106550	VALVE SUPPORT RAIL						●	●				
7	5107950	OUTERCASE BRACKET						●	●				
8	5409140	SILICONE RUBBER D.8 L=700	●	●	●	●	●						
8	5410080	SILICONE PIPE D.8 L=800						●	●				
10	5409020	FLUE ADAPTOR HE	●	●	●	●	●						
10	5409990	FLUE CONNECTION 60/100						●	●				
11	5409010	GASKET ADAPTOR	●	●	●	●	●	●	●				
12	5108690	PLATE BLANKING	●	●	●	●	●	●	●				
13	5407400	SUCTION CAP GASKET	●	●	●	●	●	●	●				
18	5663330	PRESSURE SENSING VENTURI			●		●	●	●				
18	5663490	PRESSURE SENSING VENTURI				●							
18	5664290	PRESSURE SENSING VENTURI		●									
18	5664300	VENTURI ASSEMBLY .12	●										
21	5402050	WASHER-SEALING	●	●	●	●	●	●	●				
22	5662680	FAN	●	●	●	●	●	●	●		B624		YES
22	5682500	FAN	●	●	●	●	●	●	●		B642	B625	YES
22	5686970	FAN	●	●	●	●	●				B733		
22	5691840	FAN RG128/UB 230V-55667.11925-	●	●	●	●	●					B734	YES
26	5114000	LEFT SIDE PANEL SEALED CHAMBER						●	●				
27	5113460	BACK LUNA HT 330		●	●	●	●				B641		
27	5113560	SEALED CH. REAR SIDE	●								B641		
27	5113990	SEALED CHAMBER RARE SIDE						●	●				
27	5114510	COMBUSTION CHAMBER ACCUMUL HT						●	●		B645		
27	5116310	COMBUSTION CHAMBER LUNA HT		●	●	●	●					B642	YES
27	5116320	COMBUSTION CHAMBER LUNA HT12KW	●									B642	YES
27	5116330	COMBUSTION CHAMBER ACCUMUL HT						●	●			B646	YES
29	5410450	REAR INSULATION	●	●	●	●	●	●	●				
30	5409100	CERAMIC PANEL	●	●	●	●	●	●	●				
32	5663300	6 EL. EXCHANGER			●		●	●	●				
32	5663510	CONDENSING EXCHANGER 5E		●		●							
32	5664270	EXCHANGER 4 EL.	●										

LUNA HT

Pos	Code	Description code	HSB43512300 1/2/3 1.120	HSB43524300 1/2/3 1.240	HSB43528300 1/2/3 1.280	HSB43628300 1/2/3 280	HSB43633300 1/2/3 330	NUVOLA HT 330 HSB43733000	NUVOLA HT 330 HSB43733300 1/2/3		*To serial number*	*From serial number*	*Interchangeable:*
33	5403130	O-RING 22 x 3	●	●	●	●	●	●	●				
34	5113650	PRIMARY EXCHANGER FIXING CLIP	●	●	●	●	●	●	●				
35	5629130	EXPANSION VESSEL 7,5 L.						●	●				
35	5662620	EXPANSION VESSEL 8L	●	●		●							
35	5662630	EXPANSION VESSEL 10 L			●		●						
37	5663410	PANEL-COMBUSTION BOX FRONT - T	●	●	●	●	●				B729		
37	5666790	FRONTAL ASS. C.S. NUVOLA HT						●	●		B726		
37	5689640	COMB CHAMBER FRONTAL PANEL	●	●	●	●	●					B730	YES
37	5689680	FRONTAL PANEL ASS NUVOLA HT						●	●			B727	YES
38	5401610	VIEWING WINDOW GASKET	●	●	●	●	●	●	●				
39	5203930	VIEWING WINDOW	●	●	●	●	●	●	●				
40	5103360	SURROUND - VIEWING WINDOW	●	●	●	●	●	●	●				
41	5663250	4 ELEM. BURNER LUNA HT 1.120	●										
41	5663420	5 EL. BURNER		●		●							
41	5663430	6 EL. BURNER			●		●	●	●				
46	5663340	GAS PIPE ASSEMBLY	●	●	●	●	●						
46	5666540	GAS BURNER PIPE ASSEMBLY						●	●				
49	5409280	TAP ADAPTOR	●	●	●	●	●	●	●				
59	8419900	ELECTRODE CABLE						●	●		B336		
59	8419900	ELECTRODE CABLE	●	●	●	●	●				B336		YES
59	8510970	IGNITION ELECTRODE CABLE	●	●	●	●	●	●	●			B336	YES
63	8422830	ELECTRODE - IGNITION	●	●	●	●	●	●	●				
65	8422840	ELECTRODE - IONISATION	●	●	●	●	●	●	●				
70	5663350	PIPE(PUMP/PRIMARY EXCHANGER)	●	●	●	●	●						
70	5666530	PIPE ASSEMBLY						●	●				
72	5655620	PUMP UP 15-60 AO (GRUNDFOS)						●	●				
72	5659550	PUMP UPS 15-60 AO & CONNECTOR	●	●	●	●	●						
73	607290	AUTOMATIC AIR VENT	●	●	●	●	●	●	●				
74	5406360	O-RING 14X1,78 EP	●	●	●	●	●						
75	5409240	GROMMET - PIPE ASSY D.10	●	●	●	●	●	●	●				
76	5652190	HEAT EXCHANGER DHW (22 PLATES)				●	●				B649		
76	5686700	DHW PLATE EXCHANGER 22 PLATE				●	●				B721	B650	YES
76	5689930	EXCHANGER 20 PLATE TO PLATE				●	●					B722	YES
77	5404520	DHW PLATE EXCHANGER GASKET				●	●						
78	5666740	BOILER ASS. INS. D.270						●					
78	5668540	INS. BOILER ASSEMBLY D.270							●				
79	9950620	HYDRAULIC SAFETY VALVE 8 BAR						●	●				
80	5655650	HYDRAULIC INLET ASSY	●	●	●								
80	5662240	SANIT. INLET GROUP/HEATING RET				●							
80	5663620	HYDR. INLET ASS. WITH HALL EFR					●						
80	5666600	SANITARY INLET CONNECTOR ASS.						●	●				
81	612030	FILTER ASSEMBLY ADAPTER				●							

LUNA HT

Pos	Code	Description code	HSB43512300 1/2/3 1.120	HSB43524300 1/2/3 1.240	HSB43528300 1/2/3 1.280	HSB43628300 1/2/3 280	HSB43633300 1/2/3 330	NUVOLA HT 330 HSB43733000	NUVOLA HT 330 HSB43733300 1/2/3		To serial number	From serial number	Interchangeable:
81	612650	FILTER ASSEMBLY ADAPTER 10L					●						
83	5620090	FLOW RATE LIMITATOR - 12 L/MIN						●	●				
85	5405350	O-RING				●	●						
87	5210710	PUMP CONNECTING ELEMENT	●	●	●	●	●						
90	611930	FILLING GROUP				●	●						
90	5622840	FILLING TAP MM G 3/8						●	●				
91	5652030	DRAINING TAP	●	●	●	●	●	●	●				
92	9950600	SAFETY VALVE 3 BAR						●	●				
92	9951170	SAFETY VALVE 3 BAR	●	●	●	●	●						
95	5668740	TAP/ANODE ASSEMBLY						●	●				
96	5666610	EXPANS. VESSEL/CYLINDER'S COIE						●					
96	5668550	COIL PIPE ASS./HR PUMP							●				
98	5212040	PIPE (HEATING SYSTEM-BY PASS)						●	●				
98	5659440	TUBE BY-PASS				●	●						
98	5664370	TUBE BY-PASS	●	●	●								
99	5108130	CLIP FIXING - BYPASS	●	●	●	●	●						
100	5406630	O-RING	●	●	●	●	●						
102	5658690	3 WAY VALVE	●	●	●	●	●						
102	5663040	3 PORT VALVE ASSEMBLY						●	●				
104	5666570	SANITARY OUTLET JOINT ASSEMBLY						●					
104	5668570	SANITARY OUTLET PIPE							●				
107	5630250	PIN GUIDE ASSEMBLY	●	●	●	●	●						
109	5207810	GASKET 10 X 14 X 1.5	●	●	●	●	●	●	●				
110	8380530	SPRING	●	●	●	●	●						
111	5630240	PRESSOSTAT PLATE ASSEMBLY	●	●	●	●	●						
112	5405320	DIAPHRAGM PRESSOSTAT	●	●	●	●	●	●	●				
113	5630190	BY-PASS ASSEMBLY	●	●	●	●	●						
114	5403820	O-RING 26,64 X 2,62						●	●				
115	5645660	DIFFERENTIAL PRESSOSTAT	●	●	●	●	●						
118	8380520	SPRING	●	●	●	●	●						
119	605760	HYDRAULIC VENTURI ASSEMBLY	●	●	●	●	●						
120	600750	SPACER ASSEMBLY	●	●	●	●	●						
130	5625770	MICROSWITCH ASSEMBLY	●	●	●	●	●						
131	8434840	NTC SENSOR	●	●	●	●	●	●	●		B615		YES
131	8435400	NTC SENSOR	●	●	●	●	●	●	●			B616	
132	5402830	WASHER - SENSOR SEALING	●	●	●	●	●	●	●				
134	5212120	INJECTOR	●										
134	5212140	INJECTOR		●		●							
134	5212150	INJECTOR			●		●	●	●				
135	9950760	THERMOSTAT - LIMIT	●	●	●	●	●	●	●				
136	5663360	HEAT EXCHANG.PRIMARY FLOW PIPE		●	●	●	●						
136	5664120	EXCHANGER PIPE ASSEMBLY	●										

22/01/2009

Pos	Code	Description code	HSB43512300 1/2/3 1.120	HSB43524300 1/2/3 1.240	HSB43528300 1/2/3 1.280	HSB43628300 1/2/3 280	HSB43633300 1/2/3 330	NUVOLA HT 330 HSB43733000	NUVOLA HT 330 HSB43733300 1/2/3		To serial number	From serial number	Interchangeable:
136	5666520	EXCHANGER/3 PORT VALVE PIPE --						●	●				
137	5211780	CONNECTING ELEMENT	●	●	●	●	●						
138	5402010	O RING 22.22x2.62	●	●	●	●	●	●	●				
139	5210630	CONNECTOR - GAS VALVE INLET	●	●	●	●	●						
139	5637870	VALVE FEED PIPE						●	●				
140	5662640	SIEMENS GAS VALVE						●	●		B507		
140	5662640	SIEMENS GAS VALVE	●	●	●	●	●				B507		NO
140	5671930	GAS VALVE	●	●	●	●	●					B507	
140	5671930	GAS VALVE						●	●			B507	NO
147	5116500	LOWER PANEL OUTERCASE						●	●				
147	5662810	MOUNTING PANEL-HYDRAULICS				●	●						
147	5664340	TRAVERSE	●	●	●								
151	5409590	COVER ELECTRICAL BOX	●	●	●	●	●	●	●				
152	5663520	PRINT.CONTR.PANEL LUNA HT 330					●						
152	5663550	PRINT.CONTR.PANEL LUNA HT 280				●							
152	5664390	PRINT.CONTR.PANE LUNA HT 1.240		●									
152	5664430	PRINT.CONTR.PANE LUNA HT 1.120	●										
152	5664450	PRINT.CONTR.PANELLUNA HT 1.280			●								
152	5666780	PRINTED PANEL NUVOLA HT 330						●	●				
153	5407660	PANEL - ACCESS	●	●	●	●	●	●	●				
154	5663380	PCB LMU54 FOR SIEMENS GAS VALV						●	●		B345		With New 5680200
154	5666510	PCB LMU54 FOR SIEMENS GAS VALV	●	●	●	●	●				B345		With New 5680200
154	5670360	PCB LMU54 FOR SIEMENS GAS VALV	●	●	●	●	●	●	●			B346	With New 5680200
154	5677340	PCB LMU54 FOR SIT GAS VALVE	●	●	●	●	●		●		B603	B507	With New 5680190
154	5680190	PCB LMU54 FOR SIT GAS VALVE	●	●	●	●	●		●			B604	For SIT Gas Valve
154	5680200	PCB LMU54 FOR SIEMENS GAS VALV	●	●	●	●	●		●		B506		For SIEMENS Gas Valve
156	5663400	PCB DISPLAY	●	●	●	●	●	●	●		B341		
156	5669090	P.C.B. DISPLAY SIEM.	●	●	●	●	●	●	●			B341	YES
157	5663390	COVER-CONTROL FACIA	●	●	●	●	●						
157	5666800	PANEL LUNA HT ASS.						●	●				
165	5666590	PIPE ASS. INLET/OUTLET SANIT.						●					
165	5668580	SANITARY INLET PIPE ASSEMBLY							●				
166	8421590	TERMINAL BLOCK	●	●	●	●	●	●	●				
167	5405340	FUSE HOLDER	●	●	●	●	●	●	●				
168	9950580	FUSE	●	●	●	●	●	●	●				
169	5656220	PRESSURE GAUGE WITH SUPPORT						●	●				
169	9951020	GAUGE PRESSURE	●	●	●	●	●				B741		
169	9951830	PRESSURE GAUGE	●	●	●	●	●					B742	YES
190	5404970	WASHER - SEALING G3/8	●	●	●	●	●	●	●				
191	5408970	WASHER - SEALING G1/2	●	●	●	●	●	●	●				
192	5404650	SEALING WASHER G 3/4	●	●	●	●	●	●	●				
200	5646560	HYDRAULIC CONNECTION SET						●	●				

LUNA HT

22/01/2009

Pos	Code	Description code	HSB43512300 1/2/3 1.120	HSB43524300 1/2/3 1.240	HSB43528300 1/2/3 1.280	HSB43628300 1/2/3 280	HSB43633300 1/2/3 330	NUVOLA HT 330 HSB43733300 0	NUVOLA HT 330 HSB43733300 1/2/3		*To serial number*	*From serial number*	*Interchangeable:*
200	**5658440**	HYDRAULIC CONNECTIONS BLUE -A-				●	●						
200	**5660970**	CONNECTION ASSEMBLY	●	●	●								
201	**5626860**	HEATING CONNECTION						●	●				
204	**5625980**	CONNECT.SANITARY AND INLET TAP				●	●						
204	**5626840**	DHW INLET TAP						●	●				
204	**5636230**	DHW INLET TAP	●	●	●								
207	**5625230**	DHW OUTLET GROUP						●	●				
209	**5626850**	GAS TAP GROUP						●	●				
209	**5627620**	CONNECTION GAS INLET TAP	●	●	●	●	●						
210	**9950830**	GAS TAP	●	●	●	●	●	●	●				
212	**5408330**	BICONIC GASKET	●	●	●	●	●	●	●				
216	**5626790**	FILLING TAP						●	●				
218	**5658460**	HEATING FLOW TAP WITH FILTER	●	●	●	●	●						
225	**5658100**	HEAT RETURN TAP WITH FILTER	●	●	●	●	●						
234	**5657300**	FILLING PIPE ASSEMBLY				●	●						
240	**608980**	RETAINING VALVE				●	●						
242	**8434830**	FLUE SAFETY THERMOSTAT 75øC	●	●	●	●	●	●	●				
259	**5657100**	BAXI BRAND	●	●	●	●	●	●	●				
280	**5207730**	GASKET 14,2X18X1,5				●	●						
285	**5409600**	TERMINAL BOARD COVER	●	●	●	●	●	●	●				
310	**5641850**	DIFFERENTIAL PRESSURE SWITCH						●	●				
314	**8419980**	LEAD-SENSING ELECTRODE	●	●	●	●	●						
314	**8510580**	LEAD - SENSING ELECTRODE						●	●				
316	**8380610**	CLIP-MICROSWITCH RETAINING						●	●				
336	**8380680**	CLIP-RETAINING	●	●	●	●	●	●	●				
337	**5647340**	MOTOR-3 WAY VALVE	●	●	●	●	●	●	●				
342	**5641800**	MICRO SWITCH WITH CABLE						●	●				
356	**5634820**	PIN GUIDE CONNECTOR ASSEMBLY						●	●				
357	**8380600**	SPRING						●	●				
358	**5634830**	PADDLE ASSEMBLY						●	●				
365	**5106530**	LOWER SUPPORT						●	●				
371	**5666580**	FILLING PIPE ASSEMBLY D.8						●	●				
373	**5109080**	FILTER-CENTRAL HEATING						●	●				
374	**5212030**	PLUG FILTER M30						●	●				
375	**5663030**	BY-PASS PIPE ASSEMBLY						●	●				
379	**5206120**	CONNECTING ELEMENT						●	●				
380	**5400620**	O-RING 4,47 x 1,78						●	●				
381	**5209830**	CONTROL BOX'S PIN						●	●				
382	**8419910**	LEAD-SENSING ELECTRODE	●	●	●	●	●	●	●		B702		
382	**8511130**	FLAME SENSING CABLE	●	●	●	●	●	●	●			B703	YES
408	**5211790**	EXCHANGER FLANGE	●	●	●	●	●	●	●				
409	**5409090**	BURNER GASKET	●	●	●	●	●	●	●				

22/01/2009

Pos	Code	Description code	HSB43512300 1/2/3 1.120	HSB43524300 1/2/3 1.240	HSB43528300 1/2/3 1.280	HSB43628300 1/2/3 280	HSB43633300 1/2/3 330	NUVOLA HT 330 HSB43733000	NUVOLA HT 330 HSB43733300 1/2/3		To serial number	From serial number	Interchangeable:
411	5409110	FLAME SENSING ELEC.GASKET	●	●	●	●	●	●	●				
415	5409060	SYPHON	●	●	●	●	●	●	●		B515		YES
415	5677920	CONDENSE DRAIN TRAP ASSY						●	●			B516	
415	5677920	CONDENSE DRAIN TRAP ASSY	●	●	●	●	●					B515	
417	615380	COND.SIPHON PLUG	●	●	●	●	●	●	●		B515		
419	5409080	GASKET FLANGE/EXCHANGER	●	●	●	●	●	●	●				
423	5210410	GAS VALVE CONNECTOR						●	●				
425	5409130	VENTILATOR GASKET LUNA HT	●	●	●	●	●	●	●		B539		YES
425	5411420	FAN GASKET	●	●	●	●	●	●	●			B540	
428	5409290	GASKET	●	●	●	●	●	●	●				
432	5410420	WASHER DIA 60 OUTLET BEND	●	●	●	●	●	●	●				
434	5409030	FLUE COLLECTOR LUNA HT 330	●	●	●	●	●				B641		NO
434	5409910	FLUE FLOW COLLECT.NUVOLA HT330						●	●		B645		NO
434	5682320	FLUE COLLECTOR LUNA H	●	●	●	●	●					B642	NO
434	5682330	FLUE COLLECTOR NUVOLA HT						●	●			B646	NO
435	5407550	WASHER DIA100 OUTER ADAPT SEAL	●	●	●	●	●	●	●				
438	5409050	FLUE COLLECTOR GASKET	●	●	●	●	●				B325		YES
438	5410480	GASKET						●	●				
438	5410480	GASKET	●	●	●	●	●					B325	
443	5212090	SUPPORT OVERHEAT FLUE STAT	●	●	●	●	●	●	●				
445	5409310	SYPHON PIPE						●	●				
445	5409310	SYPHON PIPE	●	●	●	●	●						YES
448	5209230	RETAINING VALVE CONNECTION						●	●				
449	5640030	RETAINING VALVE						●	●				
458	5409350	OR 2,62X58,42	●	●	●	●	●	●	●				
459	5411610	DISCHARGE PIPE	●	●	●	●	●	●	●				
471	5625960	DHW OUTLET				●	●						
479	5405190	O RING FILTER TAP				●	●						
490	5625970	DHW INLET TAP WITH FILTER				●	●						
490	5636250	DHW INLET TAP	●	●	●								
491	624440	PLUG G1/2 FILTER ASSEMBLY				●	●					B730	YES
491	5637070	PLUG WITH FILTER ASSEMBLY				●	●				B729		
493	612130	FILLING KNOB ASSEMBLY				●	●						
510	600760	DHW PADDLE ASSEMBLY	●	●	●	●	●						
511	5404600	O.R. 17,86x2,62	●	●	●	●	●	●	●				
514	5663010	PUMP FILTER CONNEC. ASS.						●	●				
518	5107180	PIN-HINGED FACIA PANEL 28/28I	●	●	●	●	●						
525	616790	CABLE ASS.+ACC. LUNA HT	●	●	●	●	●					B408	
525	616800	CABLE ASS.+ACC.NUVOLA HT						●	●			B408	
525	8434850	ANSTOSS CONNECTION-ZAG 2V	●	●	●	●	●				B408		YES
525	8434850	ANSTOSS CONNECTION-ZAG 2V						●	●		B408		
525	8435220	ANSTOSS-ZAG 2V IGNITOR	●	●	●	●	●	●	●			B408	YES

LUNA HT

22/01/2009

Pos	Code	Description code	HSB43512300 1/2/3 1.120	HSB43524300 1/2/3 1.240	HSB43528300 1/2/3 1.280	HSB43628300 1/2/3 280	HSB43633300 1/2/3 330	NUVOLA HT 330 HSB43733000	NUVOLA HT 330 HSB43733300 1/2/3		*To serial number*	*From serial number*	*Interchangeable:*
600	**5112530**	SPRING				●	●						
601	**5408560**	O-RING 8,73x1,78	●	●	●	●	●	●	●				
607	**8434930**	CONTACT SENSOR						●	●				
621	**5663120**	FILLING PIPE D.8						●	●				
624	**8434860**	HALL EFFECT SENSOR 10.0258				●	●						
631	**5663310**	AIR VENT PIPE ASSEMBLY	●	●	●	●	●	●	●				
636	**5658380**	HEATING FLOW TAP WITHOUT FILTR				●	●						
636	**5660980**	HEATING FLOW TAP WITH FILTER	●	●	●								
637	**5658470**	HEATING FLOW TAP WITHOUT FILTR				●	●						
637	**5660650**	TAP	●	●	●								
647	**5652730**	AUTO AIR VENT	●	●	●	●	●	●	●				
671	**5646780**	DRAINING TAP G 1/2 (COPPER)						●	●				
672	**5666620**	COIL/TAP PIPE ASSEMBLY						●					
672	**5668560**	PIPE							●				
673	**5409330**	PVC PIPE	●	●	●	●	●						
673	**5410030**	PIPE EPDM 15X23 L=280						●	●				
674	**5409390**	GASKET EXCHANGER 4 EL.	●										
674	**5409410**	GASKET EXCHANGER 5/6 E		●	●	●	●	●	●				
675	**8380780**	FIXING SPRING FOR EXCHANGER	●	●	●	●	●	●	●				
677	**5212000**	5 ELEMENTS CONNECTOR		●		●							
677	**5212010**	4 ELEMENTS CONNECTOR HT 1.120	●										
678	**5665130**	AIR/GAS COVER ASSEMBLY	●	●	●	●	●	●	●				
679	**8419920**	CABLE EARTH/IGNITOR						●	●		B336		
679	**8419920**	CABLE EARTH/IGNITOR	●	●	●	●	●				B336		YES
679	**8510980**	CABLE EARTH/IGNITOR	●	●	●	●	●	●	●			B336	YES
680	**5409250**	GROMMET-PIPE ASSY. D.15	●	●	●	●	●	●	●				
681	**5409120**	PROTECTION CAP-ELECTRODE	●	●	●	●	●	●	●				
682	**5211800**	SIGHT GLASS	●	●	●	●	●	●	●				
686	**5663020**	BY-PASS PLUG ASSEMBLY	●	●	●			●	●				
999	**5663850**	WIRING THERMOSTAT PREDISP.	●	●	●	●	●	●	●				
999	**8414620**	POWER CABLE	●	●	●	●	●	●	●				
999	**8419930**	FLUE THERMOSTAT/FAN WIRING	●	●	●	●	●						
999	**8419940**	FAN CHECK WIRING	●	●	●	●	●						
999	**8419950**	WIRING PCB INPUT	●	●	●	●	●	●	●				
999	**8419960**	WIRING-HEAT. NTC SENS./DHW PR.				●	●						
999	**8419970**	3 WAY WALVE WIRING	●	●	●	●	●						
999	**8419990**	DISPLAY P.C.B. WIRING	●	●	●	●	●	●	●				
999	**8510320**	GAS VALVE POWER SUPPLY	●	●	●	●	●				B507		NO
999	**8510390**	WIRING-HEA. NTC SENSOR/PUMP	●	●	●								
999	**8510440**	WIRING - TANK	●	●	●								
999	**8510530**	CABLE/FUN TH./ACC.						●	●				
999	**8510540**	FAN CHECK WIRING						●	●				

22/01/2009

Pos	Code	Description code	HSB43512300 1/2/3 1.120	HSB43524300 1/2/3 1.240	HSB43528300 1/2/3 1.280	HSB43628300 1/2/3 280	HSB43633300 1/2/3 330	NUVOLA HT 330 HSB43733000	NUVOLA HT 330 HSB43733300 1/2/3		*To serial number*	*From serial number*	*Interchangeable:*
999	**8510550**	WIRING SENS/PUMP PRESSOSTAT						●	●				
999	**8510560**	3 WAY VALVE CABLE						●	●				
999	**8510570**	GAS VALVE WIRING CABLE						●	●		B507		
999	**8511540**	GAS VALVE WIRING	●	●	●	●	●					B507	
999	**8511550**	GAS VALVE WIRING						●	●			B507	NO

Tab 112

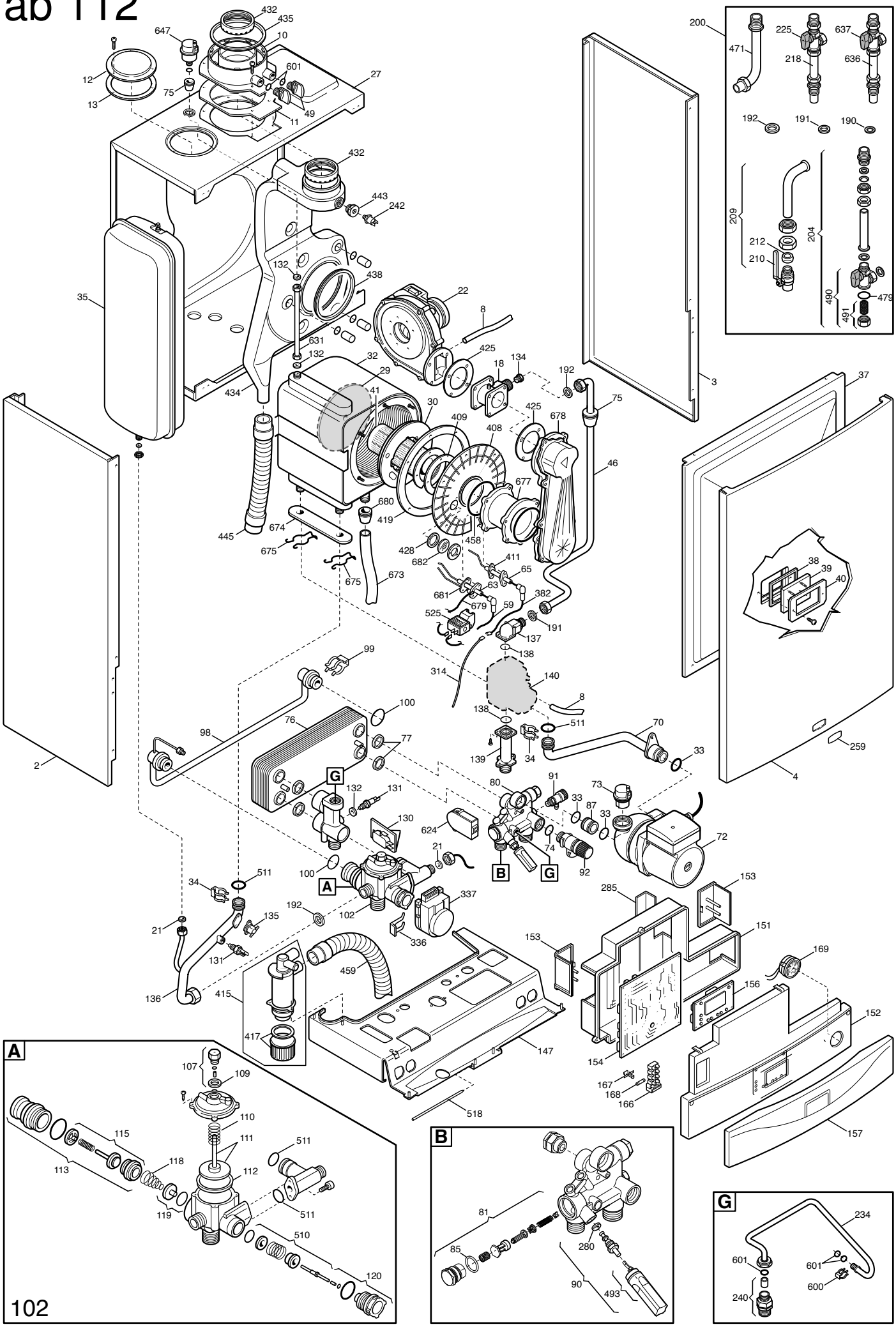

Tab 113

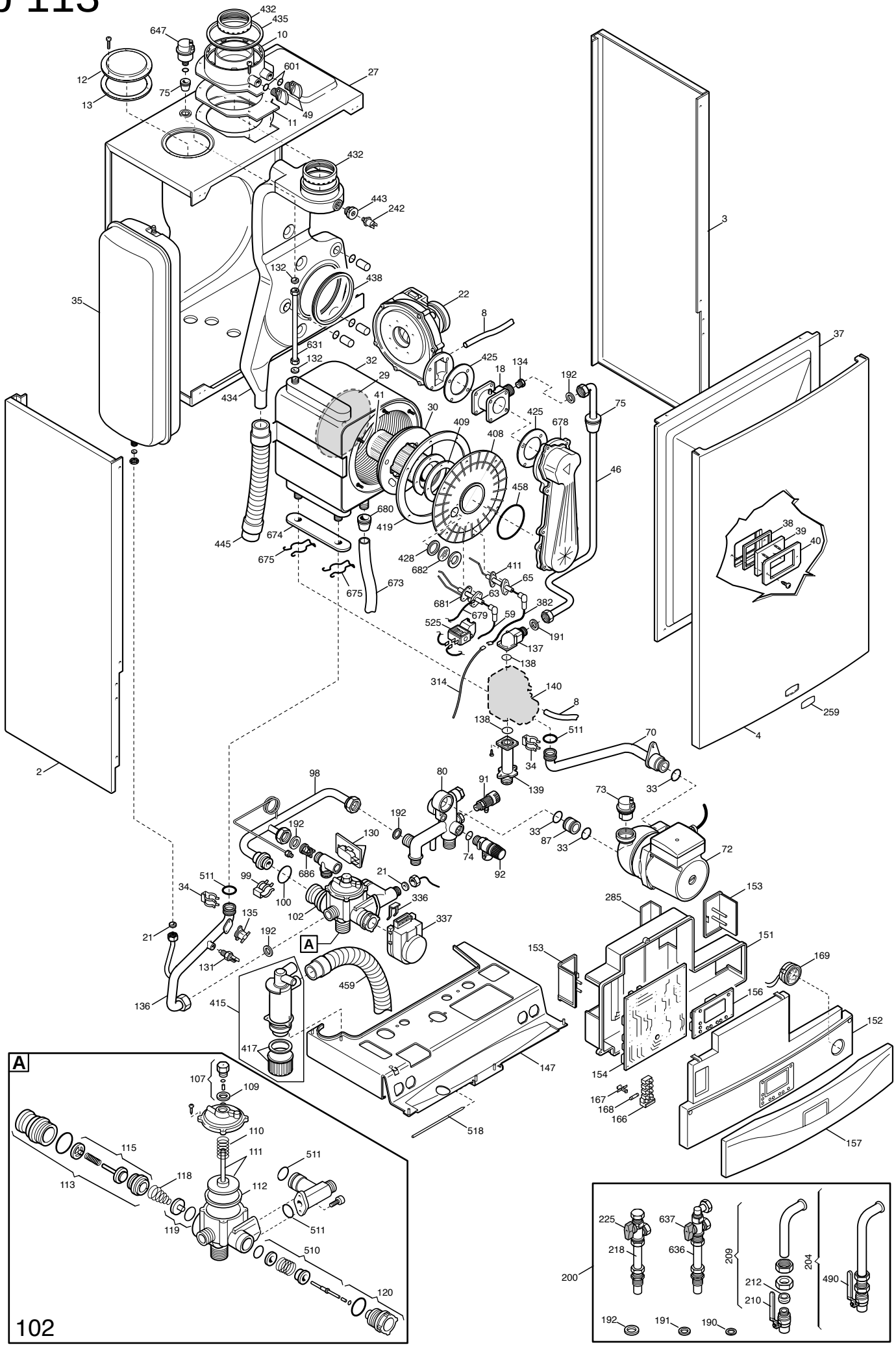
432
435
10
647
601
27
12
75
49
13
11
432
443
242
3
132
438
35
22
8
631
37
132
32
425
134
18
192
29
434
41
30
75
425
678
409
408
46
458
680
419
38
39
40
445
674
675
428
682
411
65
675
673
63
681
382
679
59
525
191
137
138
314
140
8
259
138
511
70
4
2
34
33
98
80
91
139
73
192
192
130
33
87
33
74
72
686
92
21
153
511
99
100
336
285
34
102
337
135
21
192
A
151
153
169
131
459
136
415
156
152
417
147
154
A
107
109
167
168
166
110
518
115
111
511
157
113
118
112
119
511
510
120
102
225
637
218
636
209
204
200
212
210
490
192
191
190

Tab 114

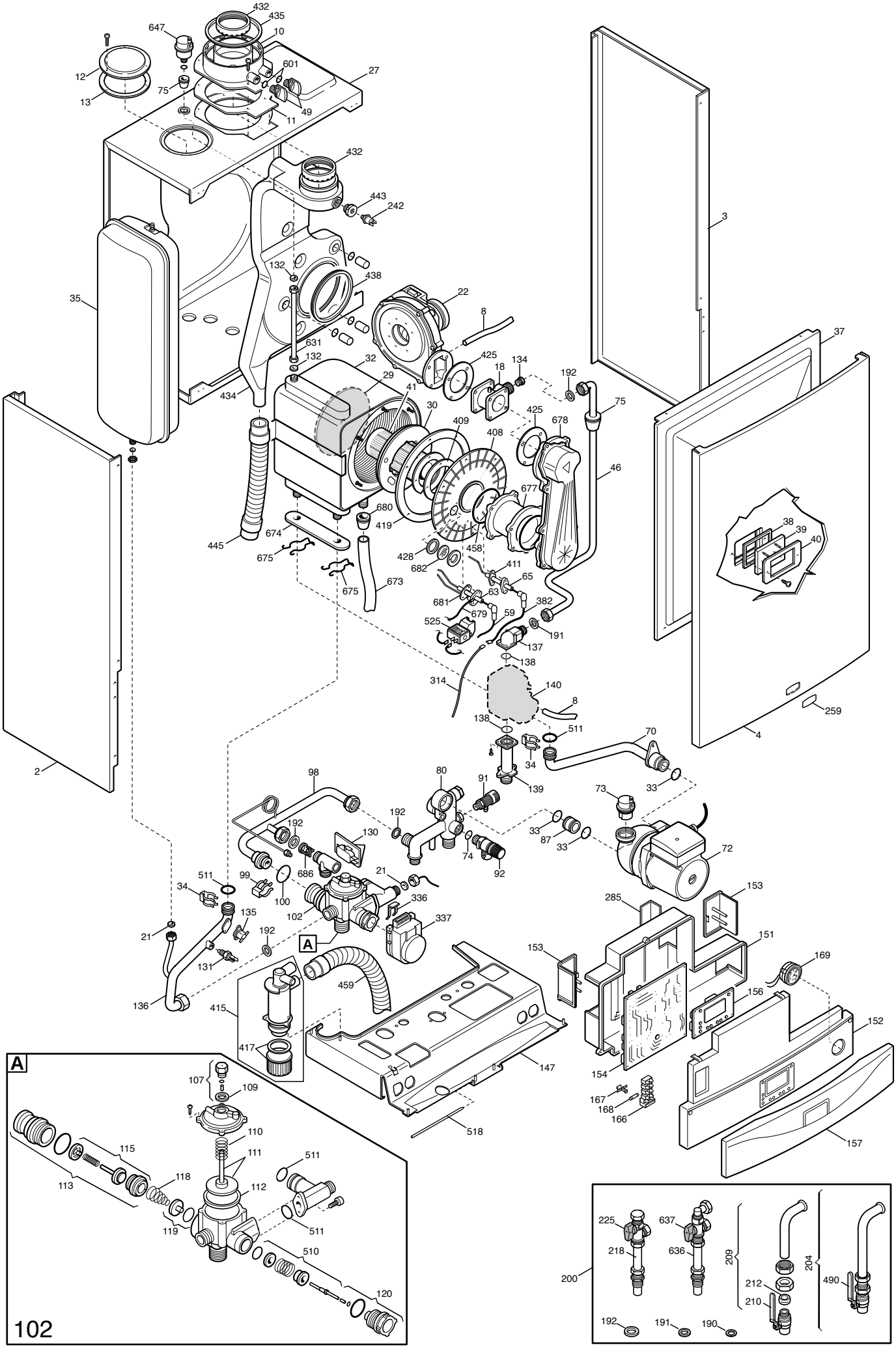
432
435
10
647
601
27
12
13
75
49
11
432
443
242
3
132
438
35
22
8
631
132
32
425
18
134
192
37
29
41
434
30
409
425
678
75
408
46
677
680
419
38
39
40
445
674
675
428
682
458
411
65
675
673
63
681
679
59
382
525
191
137
138
314
140
8
259
138
511
70
4
2
34
139
33
98
80
91
73
192
192
130
33
87
33
72
74
92
686
21
511
99
100
336
153
34
102
285
135
337
192
A
151
21
131
153
169
459
136
415
156
152
417
147
154
167
168
166
518
157
A
107
109
110
115
111
511
113
118
112
119
511
510
120
102
225
637
218
636
209
204
200
212
490
210
192
191
190

Tab 115

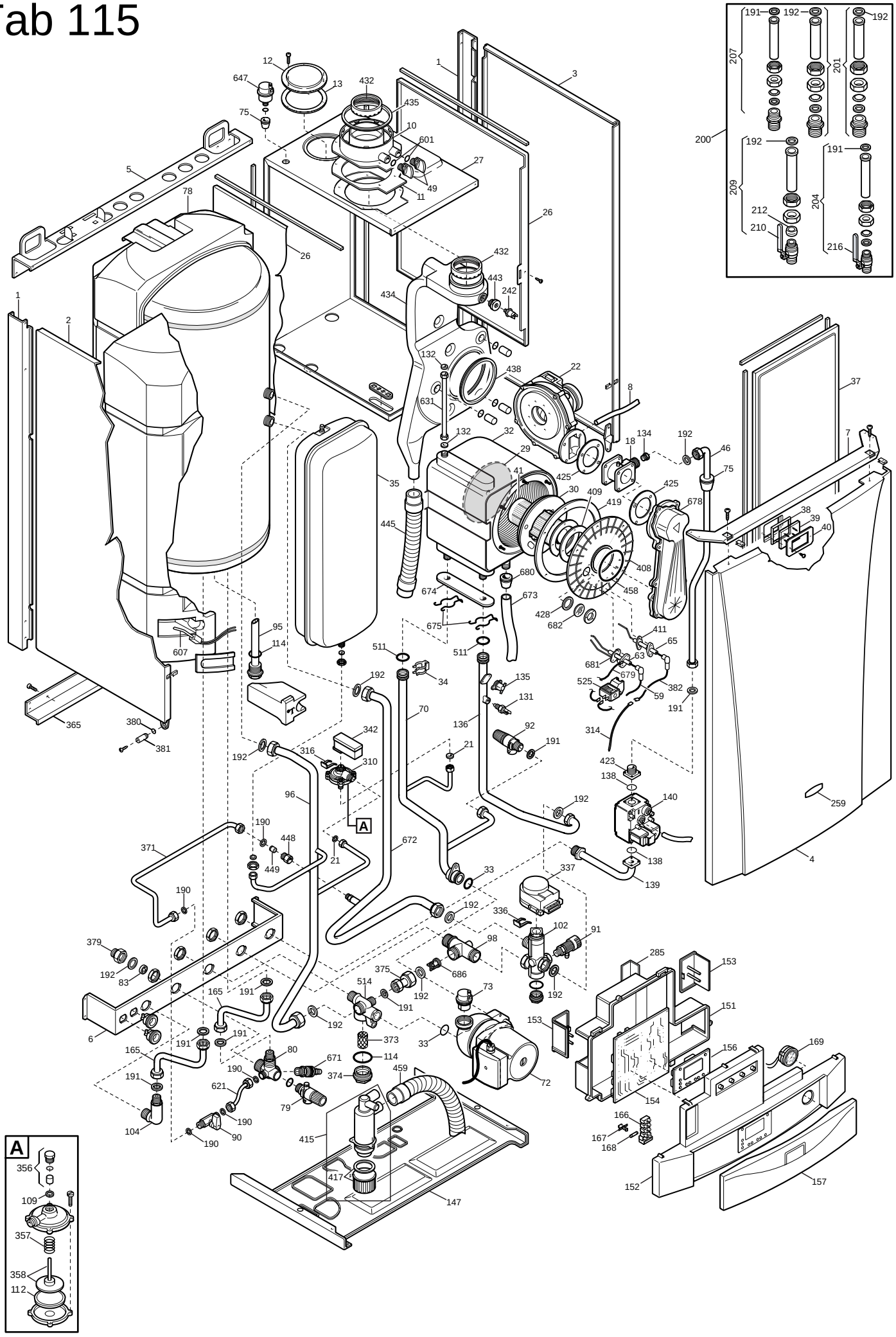
1
2
3
4
5
6
7
8
10
11
12
13
18
21
22
26
27
29
30
32
33
34
35
37
38
39
40
41
46
49
59
63
65
70
73
75
78
79
80
83
90
91
92
95
96
98
102
104
109
112
114
131
132
134
135
136
138
139
140
147
151
152
153
154
156
157
165
166
167
168
169
191
192
200
201
204
207
209
210
212
216
242
259
285
314
316
336
337
342
365
371
373
374
375
379
380
381
408
409
410
411
415
417
419
423
425
428
432
434
435
438
443
445
448
449
459
458
514
511
525
601
607
621
631
647
671
672
673
674
675
678
679
680
681
682
686
310
A
356
357
358

Tab 116

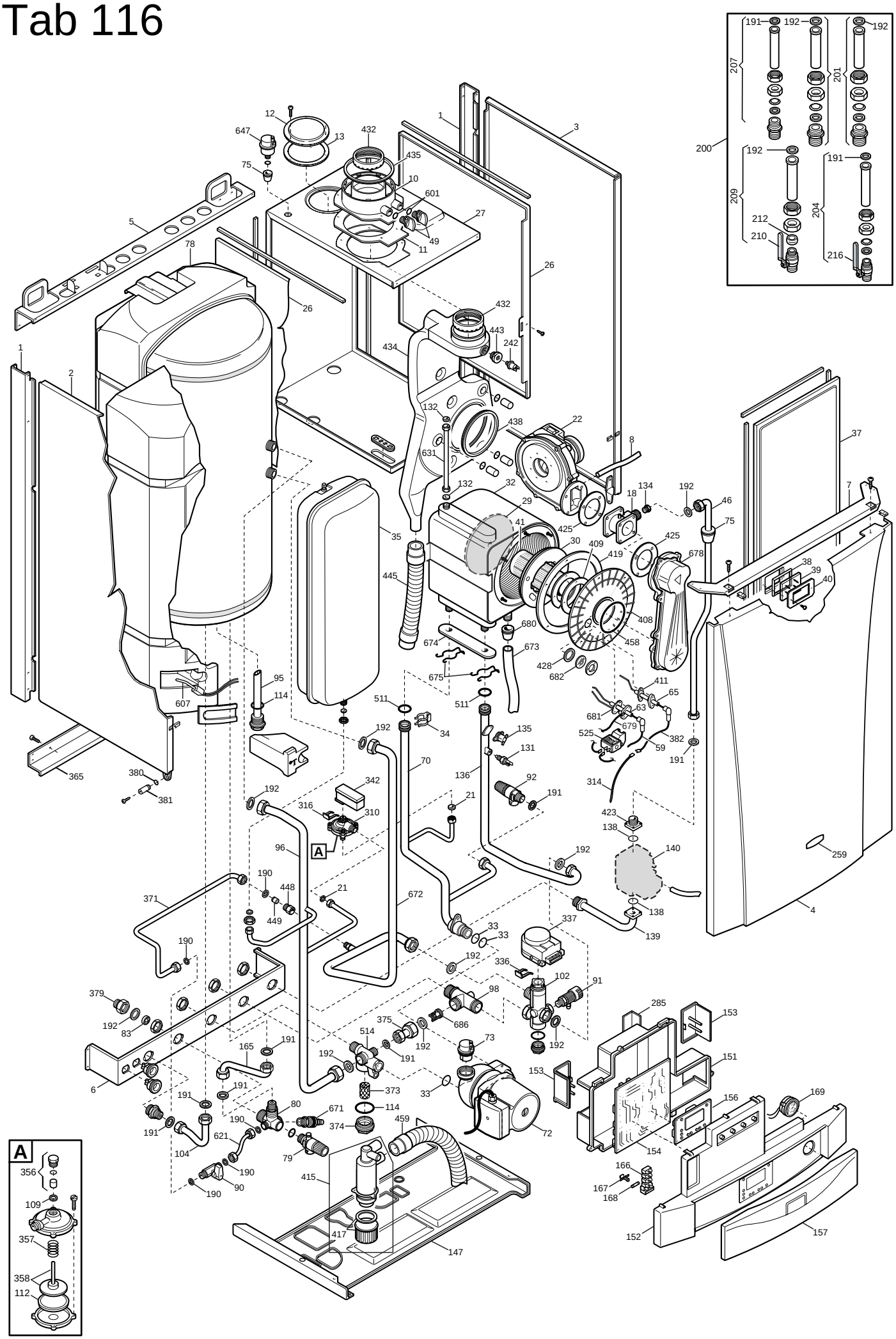

BAXI S.p.A.
Via Trozzetti, 20
36061 BASSANO DEL GRAPPA (VI)
ITALY
Tel. +390424517111
Telefax +390424517379
E-mail. service@baxi.it